A.R.I.

D-050 M1 PN 16
D-050-C M1 PN 16
D-052 M1 PN 25

Water Supply

Combination Air Valve

Description

The D-050 M1 Combination Air Valve has the features of both an air release valve and an air & vacuum valve.
The air release component is designed to automatically release small pockets of air to the atmosphere as they accumulate along a pipeline or piping system when it is full and operating under pressure.
The air & vacuum component is designed to automatically discharge or admit large volumes of air during the filling or draining of a pipeline or piping system. This valve will open to relieve negative pressures whenever water column separation occurs.

Applications

- Municipal and industrial water conveyance systems.

D-050-C M1 D-052 M1 - additional applications
- Water pipelines vulnerable to vandalism and/or water theft.
- Water systems found in remote areas.

Operation

The air & vacuum component, with the large orifice, discharges air at high flow rates during the filling of the system and admits air into the system at high flow rates during its drainage and at water column separation.
High velocity air will not blow the float shut. Water will lift the float which seals the valve.
At any time during system operation, should internal pressure of the system fall below atmospheric pressure, air will enter the system.
The smooth discharge of air reduces pressure surges and other destructive phenomena.
The intake of air in response to negative pressure protects the system from destructive vacuum conditions and prevents damage caused by water column separation. Air entry is essential to efficiently drain the system.
The air release component releases entrapped air in pressurized systems.

Without air valves, pockets of accumulated air may cause the following hydraulic disturbances:
- Restriction of effective flow due to a throttling effect as would a partially closed valve. In extreme cases this will cause complete flow stoppage.
- Obstruction of efficient hydraulic transmission due to air flow disturbances.
- Accelerate cavitation damages.
- Pressure transients and surges.
- Corrosion in pipes, fittings and accessories.
- Danger of a high-energy burst of compressed air.
- Inaccuracies in flow metering.

As the system starts to fill, the valve functions according to the following stages:
1. Entrapped air in the pipeline is discharged by the valve.
2. Liquid enters the valve, lifting the float which pushes the sealing mechanism to its sealing position.
3. Entrapped air, which accumulates at peaks and along the system, rises to the top of the valve, which in turn displaces the liquid in the valve's body.
4. The float descends, unsealing the rolling seal. The air release orifice opens and the accumulated air is released.
5. Liquid enters the valve and the float rises, pushing the rolling seal back to its sealing position.

When internal pressure falls below atmospheric pressure (negative pressure):
1. The floats will immediately drop down, opening the air & vacuum and air release orifices.
2. Air will enter the system.

Main Features

- Working pressure range: D-050 M1 0.2 - 16 bar,
  D-050-C M1 0.2-16 bar,
  D-052 M1 0.2-25 bar.
- Testing Pressure: 1.5 times the working pressure of the air valve.
- Maximum working temperature: 60° C.
- Maximum intermittent temperature: 90° C.
- Reliable operation reduces water hammer incidents.
- Dynamic design allows for high velocity air discharge while preventing premature closure.
- Lightweight, small dimensions, simple and reliable structure.
- Special orifice seat design: combination of bronze and E.P.D.M. rubber assures long-term maintenance-free operation.
- The discharge outlet enables removal of excess fluids.

Air Release Component
- Body made of high strength materials.
- All operating parts are made of specially selected corrosion-

resistant polymer materials.
- Large sized air release orifice:
• Dramatically reduces the possibility of obstruction by debris.
• Discharges high air flow rates.
• One size orifice for a wide pressure range (up to 25 bar), achieved by the A.R.I. patented rolling seal mechanism.

Valve Selection

- Size range 2", 3", 6".
- **D-050 M1** for 16 bar.
- **D-050-C M1** vandalism protected by a metal shell covering the air release component, made for 16 bar.
- **D-052 M1** vandalism protected by a metal shell covering the air release component, made for 25 bar.
- These valves are manufactured with flanged ends to meet any requested standard.
- The 2" valve is also available with a threaded BSP or NPT connection.
- Valve coating: fusion bonded epoxy coating according to the standard DIN 30677-2.
- Other coatings are available upon request.
- The air release component and the air & vacuum component are available as separate units.
- For best suitability, it is recommended to send the fluid chemical properties along with the valve request.

Upon ordering, please specify: model, size, working pressure, threads standard and type of liquid.

AIR & VACUUM FLOW RATE

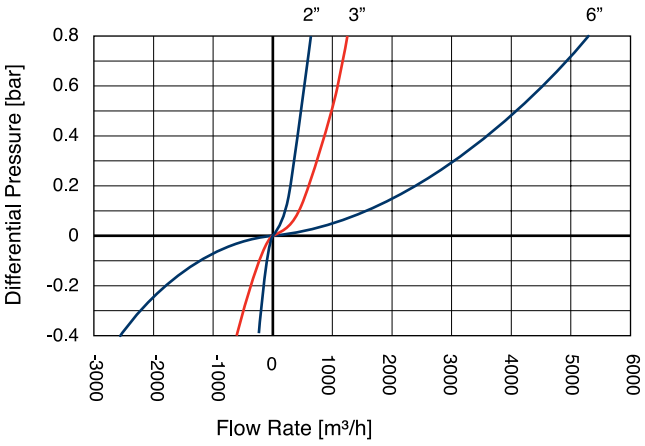

D-050 M1 / D-050-C M1 AUTOMATIC AIR RELEASE FLOW RATE

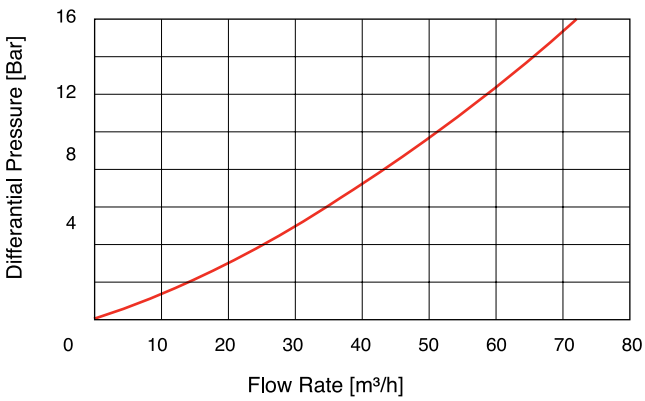

D-052 M1 AUTOMATIC AIR RELEASE FLOW RATE

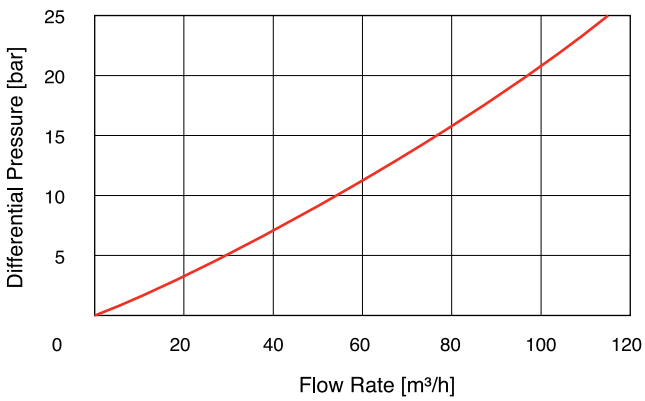

D-050 M1

A.R.I.

DIMENSIONS AND WEIGHTS

Nominal Size	Dimensions mm A	Dimensions mm B	Connections C	Connections D	Weight Kg.	Orifice Area mm² A / V	Orifice Area mm² Auto.
2" (50mm) Threaded	173	293	1½" BSP Female	1/8" BSP Female	4.3	794	12
2" (50mm) Flanged	173	306	1½" BSP Female	1/8" BSP Female	6.4	794	12
3" (80mm) Threaded	184.3	329	2" BSP Female	1/8" BSP Female	10	1809	12
3" (80mm) Flanged	211	328	2" BSP Female	1/8" BSP Female	13	1809	12

Nominal Size	Dimensions mm A	Dimensions mm B	Dimensions mm C internal	Dimensions mm C external	Connection D	Weight Kg.	Orifice Area mm² A / V	Orifice Area mm² Auto.
6" (150mm)	399	432	90	106	1/8" BSP Female	43.5	7850	12

PARTS LIST AND SPECIFICATION

No.	Part	Material
1.	Body	Reinforced Nylon
2.	Discharge Outlet	Polypropylene
3.	Rolling Seal	E.P.D.M.
4.	Clamping Stem	Reinforced Nylon
5.	Float	Foamed Polypropylene
6.	O-Ring	BUNA-N
7.	Base 2", 3"	Reinforced Nylon
	6"	Brass ASTM B-124
8.	Strainer	Nylon
9.	Cover	Ductile Iron ASTM A-536 60-40-18
10.	Orifice Seat	Bronze
11.	Orifice Seal	E.P.D.M.
12.	O-Ring	BUNA-N
13.	Bolt, Nut & Washer	Steel, Zinc Cobalt coated
14.	Body	Ductile Iron ASTM A-536 60-40-18
15.	Float	Polycarbonate / Stainless Steel SAE 316

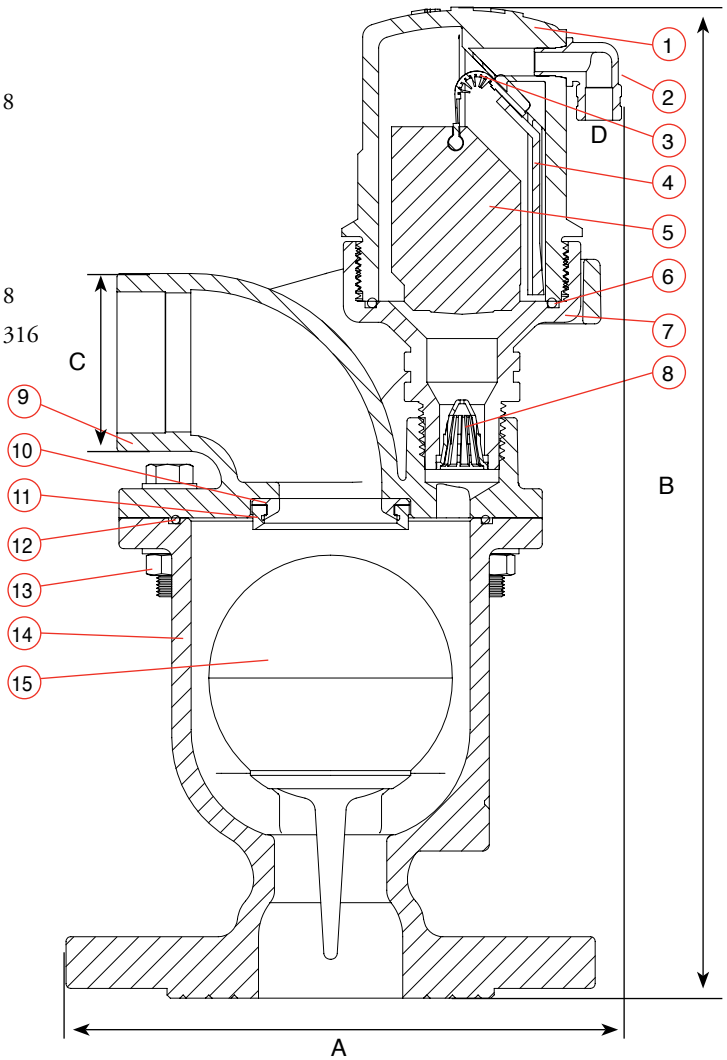

D-050-C M1 / D-052 M1

A.R.I.

DIMENSIONS AND WEIGHTS

Nominal Size	Dimensions mm A	Dimensions mm B	Connections C	Connections D	Weight Kg.	Orifice Area mm² A / V	Orifice Area mm² Auto.
2" (50mm) Threaded	168	302	1½" BSP Female	1/8" BSP Female	5.7	794	12
2" (50mm) Flanged	168	315	1½" BSP Female	1/8" BSP Female	7.8	794	12
3" (80mm) Threaded	182	336.5	2" BSP Female	1/8" BSP Female	11.5	1809	12
3" (80mm) Flanged	205	339	2" BSP Female	1/8" BSP Female	14.4	1809	12

Nominal Size	Dimensions mm A	Dimensions mm B	Dimensions mm C internal	Dimensions mm C external	Connection D	Weight Kg.	Orifice Area mm² A / V	Orifice Area mm² Auto.
6" (150mm)	399	439	90	106	1/8" BSP Female	44.9	7850	12

PARTS LIST AND SPECIFICATION

No	Part	Material
1.	Shell	
	D-050-C M1	Cast Iron ASTM A-48 CL35B
	D-050-C M1, D-052 M1	Ductile Iron ASTM A-536 60-40-18
2.	Body	Reinforced Nylon
3.	Discharge Outlet	Brass ASTM B-124
4.	Rolling Seal	E.P.D.M.
5.	Float	Foamed Polypropylene
6.	Clamping Stem	Reinforced Nylon
7.	O-Ring	BUNA-N
8.	Base	Brass ASTM B124
9.	Strainer	Nylon
10.	Cover	Ductile Iron ASTM A-536 60-40-18
11.	Orifice Seat	Bronze
12.	Orifice Seal	E.P.D.M
13.	O-Ring	BUNA-N
14.	Bolt, Nut & Washer	Steel, Zinc Cobalt coated
15.	Body	Ductile Iron ASTM A-536 60-40-18
16.	Float	Polycarbonate / Stainless steel SAE 316

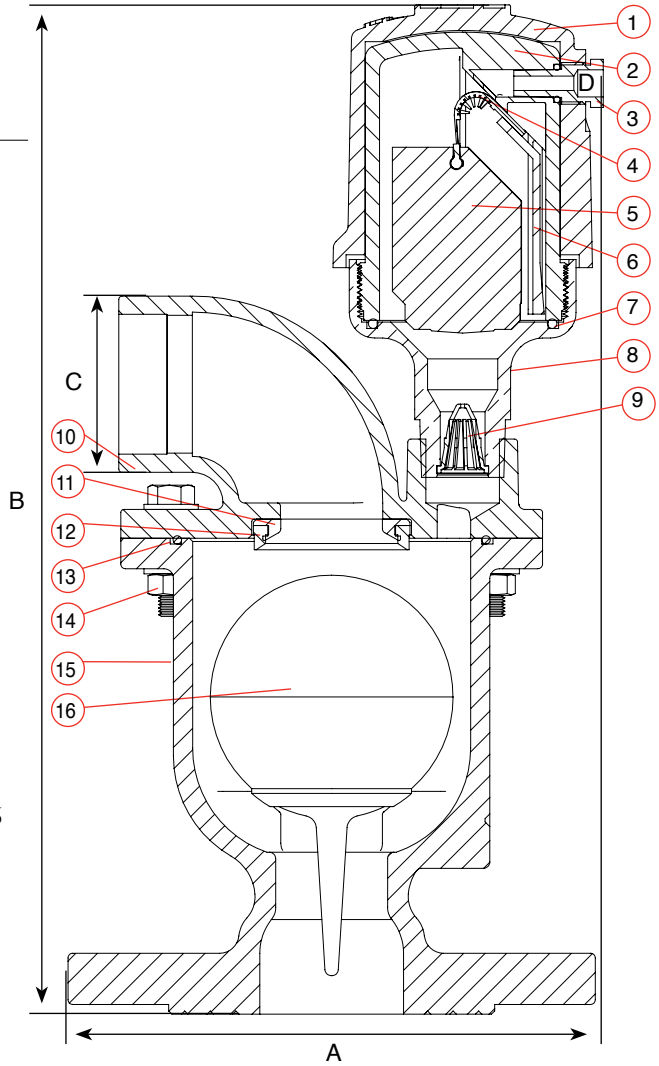

A.R.I. FLOW CONTROL ACCESSORIES Ltd. www.arivalves.com ari@ari.co.il Tel: 972-4-6761988

A.R.I. FLOW CONTROL ACCESSORIES Ltd. reserves the right to make product changes without prior notice. To insure receiving updated information on parts specifications, please call the export dept. at the A.R.I. factory. A.R.I. FLOW CONTROL ACCESSORIES Ltd. shall not be held liable for any errors. All rights reserved.