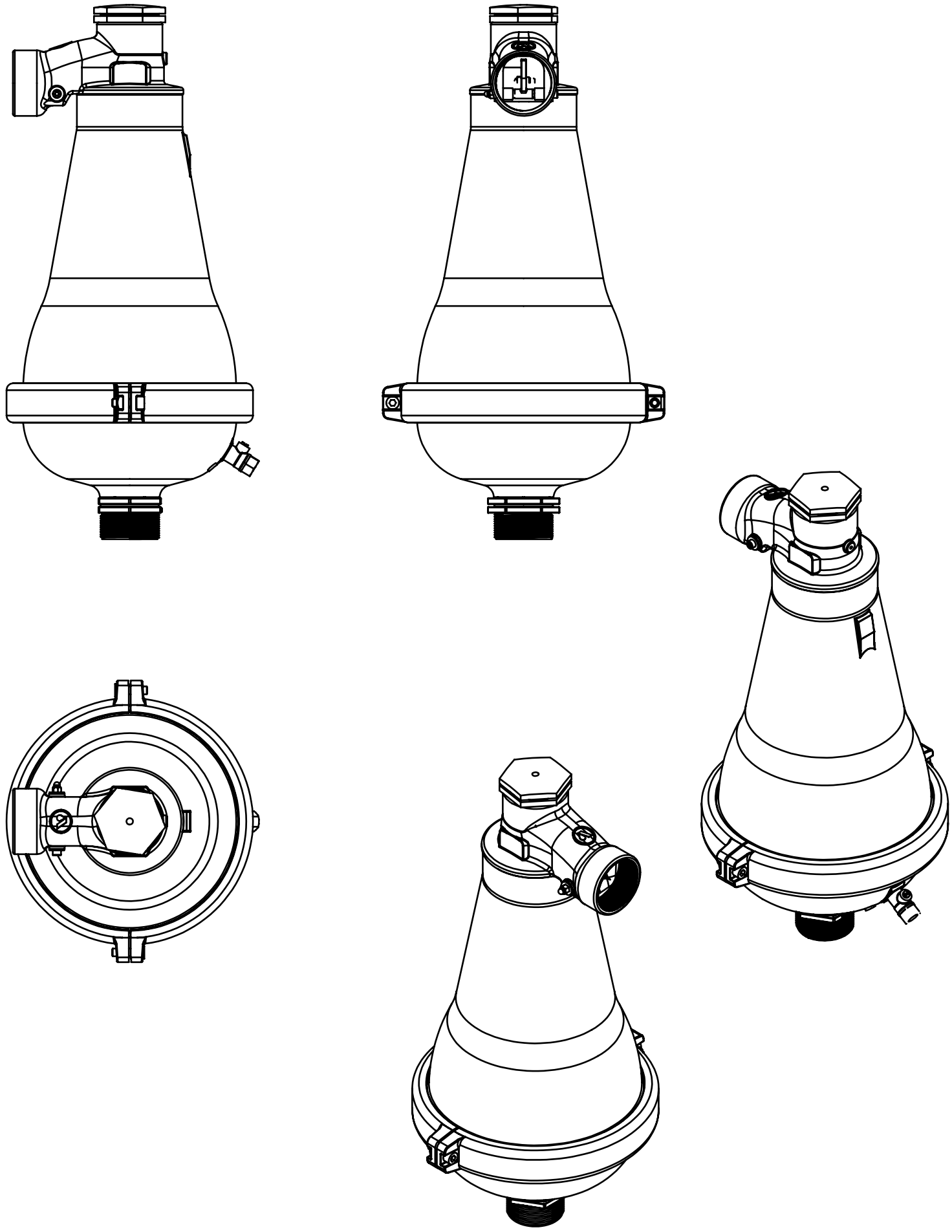

Revision No.